The Waveguide Solution

Waveguide Flexible

Flexible/Twistable	FT SERIES
Flexible Only	FO SERIES
Twistable Hybrid	TH SERIES
Flexible Only Hybrid	FH SERIES

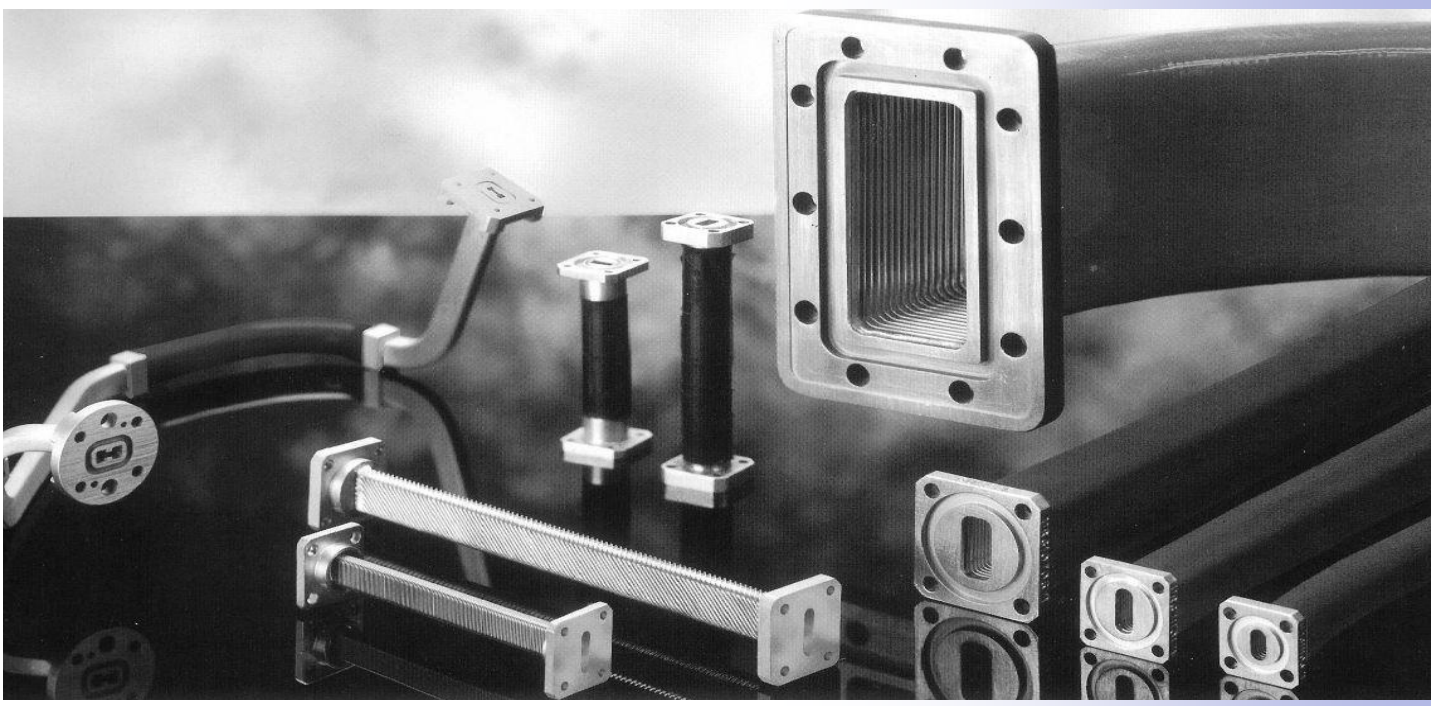

The Waveguide Solution flexible waveguides are designed to isolate vibration, eliminate installation difficulties caused by misalignment and to provide a simple aid to positioning and alignment of antennas.

Both flexible / twistable and flexible / only are made from a helically wound waveguide core and additional mechanical support is offered from a variety of protective jackets.

The Waveguide Solution also manufacture a range of high performance double ridge flexible and flexible / twistable waveguides.

The Waveguide Solution is approved to ISO 9001:2000

RUPPtronik, Breslauer Str.14, 83052 Bruckmühl
info@rupptronik.de t. 08062-80 96 96-0 f. 08062-80 96 96-9 www.RUPPtronik.de

Core Types

TWS Flexible / Twistable and Flexible Only core is manufactured by a process of helical winding a silver coated, brass strip to form a continuous, uniform rectangular tube.

Flex/Twist

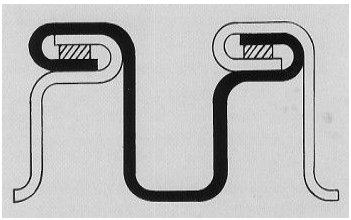

Flexible/Twistable is sealed electrically via a friction joint. This construction has the best twistable performance of all TWS waveguides. The Twistable waveguide core will hold limited pressure, but relies on the jacket for pressure sealing. Flex/Twist is not recommended for low PIM applications -use TWS seamless core.

Flex/Only

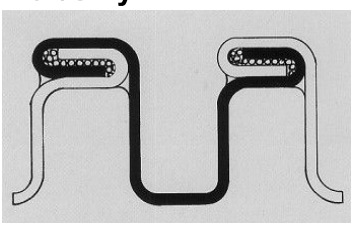

Flexible/Only core is wound with a solder fillet in the Interlock, thus eliminating any RF and Pressure Leakage. Flex/Only will flex in the E and H planes only, although pre-set twists can be incorporated during manufacture.

Seamless

This is manufactured by convoluting and forming a metal tube so it will flex in the E and H planes only. Seamless offers the best PIM performance when used in conjunction with the appropriate flanges.

Side Seam

This is similar in construction to seamless but made from sheet and brazed together.

Operating Temperature Ranges

The table shown below gives the thermal characteristics for the different core types.

Core type	Operating temperature range
Flexible / Twistable	-55 to +145
Flexible / only	-55 to +145
Seamless Brass / BeCu	-55 to +145
Side seam silver plated	-55 to +145
Side seam Brass / BeCu	-70 to +260

Jacket Types

The Waveguide Solution offer a range of different protective coverings to suit most requirements.

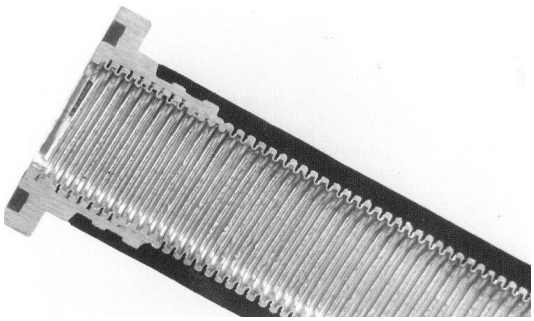

Vulcanised Jackets

Neoprene, silicone, and high conductivity silicone jackets are vulcanized to the waveguide using thermal compression techniques, and the material used by The Waveguide Solution has a proven high resistance to ozone attack. The jacket provides support to the convolutions during flexing and the pressure seal in Flexible / Twistable waveguides Neoprene is the standard jackets for TWS flexible waveguides.

Cold Cure Jackets

Where preformed flexible waveguides are required or vulcanizing is not viable, The Waveguide Solution offer a variety of cold cure jackets in both silicone or (Urethane) Devcon.
Enamel or epoxy painting may be offered as an alternative to a moulded jacket if required, but should be offered only after consulting the factory.

Operating Temperature Ranges

When operating at elevated temperatures, care should be taken to ensure that the correct jackets and solders have been requested.
The table shown below gives the thermal characteristics for the different jackets available with TWS flexible waveguides.

Jacket type	Operating temperature range	Environmental protection
Neoprene	-55 to +100	Oil, Ozone
Silicone	-70 to 200	Skydrol
Fluoro Silicone	-100 to +200	Skydrol
Cold Cure Silicone	-65 to +260	Good envionmental
Cold Cure Urethane, Devcon	-25 to +100	Good envionmental

As standard, high melting point lead free solder is used to attach the flanges (operating temperature range -55 to +181). Silver solder (operating temperature range -196 to +254) may also be used in some applications.

RUPPtronik, Breslauer Str.14, 83052 Bruckmühl
info@rupptronik.de t. 08062-80 96 96-0 f. 08062-80 96 96-9 www.RUPPtronik.de

Preformed and hybrid flexible waveguide assemblies

A **"Preformed"** waveguide assembly is formed into the desired shape during the manufacturing process. Preforming can reduce the stress on the waveguide and the joints, and it is recommended in waveguides that will be bent close to the minimum static bend radius.
Preforming may be carried out on all TWS Flexible Waveguides, Side Seam and Seamless waveguides. If a permanent twist is required the TWS Flexible Only Waveguides may be manufactured with a set twist. Preformed waveguides offer a defined and measured electrical performance for the installed shape.

A **"Hybrid"** waveguide run can contain both rigid and flexible sections. Flangeless low profile joints offer the following advantages:

- eliminate EMC issues associated with flange interfaces
- gas tight joints
- Lower overall mass and lower profile
- Lower insertion loss

Wherever possible formed sections will be used in preference to cast or machined sections to ensure the best possible insertion loss and match specifications.

Both preformed and hybrid waveguides can be supplied on a keeper plate, if required, to maintain the shape during storage / shipping.

Jacketing of Preformed and hybrid waveguides
In some cases, it is possible to use hot pressure cured rubbers to jacket waveguides that have been preformed, but this will require specific mould tooling. Where this is not desirable a range of cold cure jackets are available.

Electrical Properties

Average Power
Power specifications are based on figures published in IEC 636 for complete jacketed assemblies. The figures used are the maximum recommended for the lowest frequency in the designated waveguide band, not bent and with no pressurisation.

Peak Power
Peak power rating is calculated mid-band with a load match of 1.5:1, a power safety factor of 2.25 and assumes a voltage breakdown at NTP of 30,000V/cm.

Power ratings are for information only

Environmental

Vibration
Flexible waveguides by design have a low spring stiffness, and as such, a low first resonant frequency. If this resonant frequency is excited, then violent oscillation may occur so they should be properly supported.

Humidity
Humidity in general will not affect a flexible waveguide, although low surface temperatures may cause condensation, which may penetrate non-sealed flanges through capillary action. Also non-jacketed Flexible/ Twistable waveguide may be prone to condensation. Long lengths of waveguide should be sealed or regularly purged with dry air, where they may be used in areas of high humidity, to prevent moisture buildup.

Climatic
Treatment of brass flanges with Tin or Silver is recommended where a corrosive environment is envisaged. Aluminium flanges should, as a minimum requirement, be coated with an iridite or chromate conversion finish.

As standard, brass flanges are offered unplated and aluminium flanges treated with iridite or chromate.

Installation

Waveguides should not be stretched or forced to mate and should not be used to support any other component. When using clamps with flexible waveguides care must be taken not to crush the waveguide core.

The Bend Radius
The static bend radius is the minimum bend that an assembly may be subject to without repeat movement (except as a consequence of small vibrations or axial expansions).
TWS designs its flexible waveguide with additional support at the flange to flexible joint. However, care should be taken not to subject this area at the back of the flange to the minimum static bend radius.

Where a flexible waveguide is subject to intermittent or continuous cycles or movement during operation, then the minimum *repeat* bend radius will apply.

All TWS flexible waveguides have been tested to IEC636. The bend radii specified in this data sheet are larger than those specified in IEC636 – this is to extend the life of the waveguides beyond the 1,000,000 flexures that the guides have been tested to. Tighter repeat bend radii may be achieved but consult the factory for details.

RUPPtronik, Breslauer Str.14, 83052 Bruckmühl
info@rupptronik.de t. 08062-80 96 96-0 f. 08062-80 96 96-9 www.RUPPtronik.de

Hardware / Fixing Kits

Sets of nuts, bolts and washers can be provided in fixing kits under TWS part number FK* *-* ** as appropriate for a pair of mated flanges. The fixing kits will include rubber "O" rings or gaskets to allow for a standard Plain flange to Seal flange assembly. If requested, shims or metal gaskets maybe included. Fixing kits are provided in individual bags / boxes and may be packaged with waveguides as required. One fixing kit will provide all the nuts, bolts, washers and "O" rings to assemble one end.

"O" Rings or Gaskets

"O" rings are normally made from either silicone, nitrile, neoprene or EPDM. In most applications where the temperature range is within –10 to +100 deg C, neoprene or EPDM are satisfactory. Outside of this temperature range silicone is recommended.

RF Leakage Test Method - (based on IP1504).

The RF leakage specification is based on the test method detailed below. For consistency, it is identical to the test method used by Quasar Microwave.

Test Method

Connect the test waveguide onto the test port of an analyzer and terminate with a load.
Run the waveguide to coax adaptor around the flanges of the test waveguide and ensure that the leakage from the flange is at least 5 dB down on the test requirement.
With the test waveguide static and flexed / twisted to the minimum bend and twist specifications, move the waveguide to coax adaptor along the 4 sides of the waveguide, with the coax adaptor in contact with the waveguide surface. The alignment of the waveguide to coax adaptor aperture of is always to be the same as that of the test waveguide broadwall.
The leakage is then measured and the worst value recorded. The results of the measurements obtained are converted by using the 'x' values given in table 1, to their equivalent values when the measurements are made with a 10dB gain horn placed one metre from the waveguide

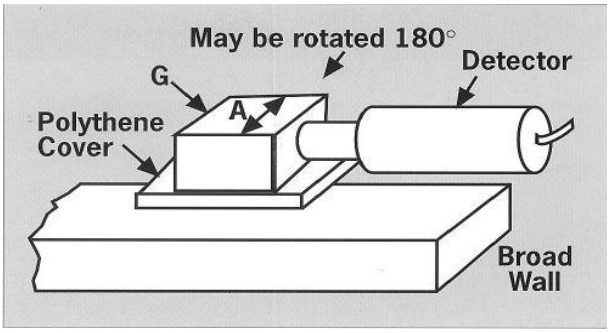

RF Leakage value

The RF leakage value quoted in the specifications is based on the following calculation derived from the test results. The formula is used to calculate the equivalent RF Leakage Value if the device under test were measured using a 10dB Gain Horn placed one metre from the device under test.

Table 1

Waveguide Size	X=	Waveguide Size	X=
8	13.3	15	25.0
9A	16.9	16	26.9
10	16.9	17	28.5
11A	18.8	18	30.1
12	20.5	19	31.8
13	22.0	20	33.5
14	23.3	21	33.5
15	25.0	22	37.0

RF Leakage Formula

V =-A-X
V = Value of RF Leakage at 1m from waveguide.
A = Measure of RF Leakage of the device under test.
X = the value from table 1 (shown opposite for the appropriate waveguide size).

Note if the flexible/twistable waveguide is bent or twisted beyond the minimum recommended specification for the flexible section, then the RF leakage and other electrical performance characteristics may be affected.

No guarantee can be offered for products installed beyond their recommended operating parameters.

In many RF Leakage tests the majority of the leak is experienced at the flange interface, between the waveguide flange and the test equipment. Care must be taken to ensure that this joint is leak tight before testing.

For TWS RF Tight Flexible/Twistable assemblies, the length of the solder joint of the flange is extended along the waveguide to prevent leakage. This has the effect of reducing the flexible section by a further 10mm.

RF Tight Flexible/Twistable Waveguide

A high performance conductive silicone rubber jacket is available for flexible/twistable waveguides. This guarantees RF leakage as better than –90dB. (Tested using the test method detailed above)
Defined as the EMC jacket, this product is available on Flexible/Twistable waveguides simply by requesting the letter "E" under the field for the jacket in the TWS part number i.e. FT 20 P E B 402-402/M300.

RUPPtronik, Breslauer Str.14, 83052 Bruckmühl
info@rupptronik.de t. 08062-80 96 96-0 f. 08062-80 96 96-9 www.RUPPtronik.de

Rectangular Flexible/Twistable and Flexible/Only Waveguide - electrical properties

Operating Frequency Band (GHz)	Waveguide Designation				Electrical specification									
	UK WG	IEC R	E.I.A WR	TWS PART NUMBER FT = Flexible/Twistable FO = Flexible/Only	Atten-uation dB/m	V.S.W.R. & (Return Loss dB's) 300mm		600mm		900mm		Average power W max	Peak power KW max	*RF leak-age dB
2.60 -3.95	10	32	284	FT 10 –PVZ-(***)-(***) /M(**)	0.11	1.055	(31.4)	1.070	(29.5)	1.070	(29.5)	5000	2360	50
2.60 - 3.95	10H			FT10H –PVZ-(***)-(***) /M(**)	0.12	1.055	(31.4)	1.070	(29.5)	1.070	(29.5)	N/A	N/A	50
3.30 - 4.90	11A	40	229	FT11A –PVZ-(***)-(***) /M(**)	0.15	1.058	(31.0)	1.070	(29.5)	1.075	(28.8)	4000	1680	50
3.95 - 5.85	12	48	187	FT 12 –PVZ-(***)-(***) /M(**)	016	1.058	(31.0)	1.075	(28.8)	1.080	(28.3)	3000	1027	50
4.90 - 7.05	13	58	159	FT 13 –PVZ-(***)-(***) /M(**)	0.18	1.058	(31.0)	1.080	(28.3)	1.085	(27.8)	2500	827	50
5.85 - 8.20	14	70	137	FT 14 –PVZ-(***)-(***) /M(**)	0.28	1.064	(30.2)	1.085	(27.8)	1.090	(27.3)	2000	587	50
7.05 - 10.0	15	84	112	FT 15 –PVZ-(***)-(***) /M(**)	0.30	1.064	(30.2)	1.090	(27.3)	1.092	(27.1)	1600	384	50
8.20-12.40	16	100	90	FT 16 –PVZ-(***)-(***) /M(**)	0.40	1.064	(30.2)	1.092	(27.1)	1.094	(27.0)	1200	244	50
10.0 - 15.0	17	120	75	FT 17 –PVZ-(***)-(***) /M(**)	0.50	1.07	(29.4)	1.094	(27.0)	1.100	(26.4)	800	195	50
12.4 - 18.0	18	140	62	FT 18 –PVZ-(***)-(***) /M(**)	0.80	1.07	(29.4)	1.100	(26.4)	1.105	(26.0)	400	120	50
15.0 - 22.0	19	180	51	FT 19 –PVZ-(***)-(***) /M(**)	1.00	1.100	(26.4)	1.120	(25.0)	1.120	(25.0)	200	95	50
18.0 - 26.5	20	220	42	FT 20 –PVZ-(***)-(***) /M(**)	1.20	1.152	(23.0)	1.170	(22.1)	1.170	(22.1)	120	53	50
22.0 - 33.0	21	260	34	FT 21 –PVZ-(***)-(***) /M(**)	1.50	1.170	(22.1)	1.195	(21.0)	1.195	(21.0)	100	42	50
26.5 - 40.0	22	320	28	FT 22 –PVZ-(***)-(***) /M(**)	2.0	1.195	(21.0)	1.300	(17.1)	1.300	(17.7)	90	32	50

Double Ridge Rectangular Flexible/Twistable and Flexible/Only Waveguide - electrical properties

Operating Frequency Band (GHz)	Waveguide Designation		Electrical specification									
	Waveguide Designation	TWS PART NUMBER FT = Flexible/Twistable FO = Flexible/Only	Atten-uation dB/m	V.S.W.R. & (Return Loss dB's) 300mm		600mm		900mm		Average power KW max	Peak powe MW max	*RF Leak-age dB
4.75 - 11.0	WRD475 D24	FT475 –PVZ-(***)-(***) /M(**)	0.65	1.110	(25.7)	1.150	(23.1)	1.150	(23.1)	N/A	N/A	50
5.8 - 16.0	WRD580 D28	FT 80 –PVZ-(***)-(***) /M(**)	1.20	1.180	(21.5)	1.250	(19.1)	1.300	(17.7)	N/A	N/A	50
6.5 - 18.0	WRD650 D24	FT650 –PVZ-(***)-(***) /M(**)	1.31	1.200	(20.8)	1.250	(19.1)	1.350	(16.6)	N/A	N/A	50
7.5 - 18.0	WRD750 D24	FT 50 –PVZ-(***)-(***) /M(**)	1.31	1.200	(20.8)	1.250	(19.1)	1.300	(17.1)	N/A	N/A	50
11.0 - 26.5	WRD110 C24	FT 10 –PVZ-(***)-(***) /M(**)	3.61	1.220	(20.0)	1.350	(16.6)	1.350	(18.6)	N/A	N/A	50
18.0 - 40.0	WRD180 C24	FT 80 –PVZ-(***)-(***) /M(**)	2.79	1.375	(16.0)	1.500	(14.0)	1.500	(14.0)	N/A	N/A	50

*The electrical properties of flex/only core are essentially the same as for the flexible/twistable core, with the exception of the RF leakage figure which is not applicable to flex/only core.
A conductive silicone jacket is available for standard flexible/twistable waveguides, which guarantees RF leakage better than -90dB - insert the letter "E" in the jacket field of the TWS part number (eg FT 20PEB 403-402/M300)
** Insert flexible Waveguide length in mm
*** For the 3 digit waveguide flange part number, refer to the TWS Flange catalogue, or consult the factory.
H = Half Height Waveguide

Notes

1. RF Leakage specification based on the TWS method of test detailed in the data sheet.
2. V.S.W.R. figures are based on Plain to Plain flanges. Degraded figures can be expected with Plain to Choke flanges.
3. Average power specifications are based on figures published in IEC 636 for complete jacketed assemblies and are the maximum recommended at the lowest frequency in the designated band.
4. Peak power rating is calculated mid-band with a load match of 1.5:1, a power safety factor of 2.25 and assumes a voltage breakdown at NTP of 30,000V/cm. Power ratings are for information only.
5. The match of the waveguide can generally be optimised over a reduced frequency band. Please specify the operating band when ordering.

RUPPtronik, Breslauer Str.14, 83052 Bruckmühl
info@rupptronik.de t. 08062-80 96 96-0 f. 08062-80 96 96-9 www.RUPPtronik.de

Rectangular Flexible/Twistable and Flexible/Only Waveguide - mechanical properties

Waveguide Designation				Mechanical specification									
							Minimum Bend Radius				*Twisting Rating	
UK WG	IEC R	E.I.A WR	TWS PART NUMBER FT = Flexible/Twistable FO = Flexible/Only	Sheath size mm	Weight Unflanged Kg/m	Maximum Operating Pressure lb/in sq	Static E Plane mm	Static H Plane mm	Repeat-ed E Plane mm	Repeat-ed H Plane mm	Static deg/m	Repeat-ed deg/m
10	32	284	FT 10 –PVZ-(***)-(***) /M(**)	86X48	0.803	20	180	355	710	1420	105	25
10H			FT10H –PVZ-(***)-(***) /M(**)	85X24	0.658	20	150	405	810	1625	105	25
11A	40	229	FT 11A –PVZ-(***)-(***) /M(**)	74X43	0.729	30	165	330	880	1320	130	35
12	48	187	FT 12 –PVZ-(***)-(***) /M(**)	61X36	0.560	30	165	330	880	1320	155	40
13	58	159	FT 13 –PVZ-(***)-(***) /M(**)	53X36	0.533	30	125	255	610	1020	185	45
14	70	137	FT 14 –PVZ-(***)-(***) /M(**)	48X25	0.331	30	100	205	405	815	210	52
15	84	112	FT 15 –PVZ-(***)-(***) /M(**)	38X20	0.274	35	75	150	305	810	260	68
16	100	90	FT 16 –PVZ-(***)-(***) /M(**)	31X15	0.226	45	85	125	255	510	315	76
17	120	75	FT 17 –PVZ-(***)-(***) /M(**)	23x15	0.186	45	85	115	255	510	365	92
18	140	62	FT 18 –PVZ-(***)-(***) /M(**)	23X15	0.162	45	50	100	205	405	445	112
19	180	51	FT 19 –PVZ-(***)-(***) /M(**)	23x15	0.120	45	50	100	205	405	445	112
20	220	42	FT 20 –PVZ-(***)-(***) /M(**)	18X13	0.078	45	30	85	125	255	630	157
21	260	34	FT 21 –PVZ-(***)-(***) /M(**)	18X13	0.078	45	30	85	125	255	630	157
22	320	28	FT 22 –PVZ-(***)-(***) /M(**)	13 dia	0.057	45	25	50	100	205	920	230

Double Ridge Rectangular Flexible/Twistable and Flexible/Only Waveguide - mechanical properties

Waveguide Designation		Mechanical specification								
					Minimum Bend Radius				*Twisting Rating	
Waveguide Designation	TWS PART NUMBER FT = Flexible/Twistable FO = Flexible/Only	Sheath size mm	Weight Unflanged Kg/m	Maximum Operating Pressure lb/in sq	Static E Plane mm	Static H Plane mm	Repeat-ed E Plane mm	Repeat-ed H Plane mm	Static deg/m	Repeat-ed deg/m
WRD475 C24	FT 475 –PVZ-(***)-(***) /M(**)	36X20	0.274	30	89	180	355	915	295	98
WRD580 C28	FT 580 –PVZ-(***)-(***) /M(**)	26X15	0.186	45	76	155	305	510	490	130
WRD650 C24	FT 650 –PVZ-(***)-(***) /M(**)	25X15	0.186	45	76	155	305	510	390	115
WRD750 C24	FT 750 –PVZ-(***)-(***) /M(**)	19X13	0.078	45	50	100	205	405	490	130
WRD110 C24	FT 110 –PVZ-(***)-(***) /M(**)	19X13	0.078	45	50	100	205	405	590	196
WRD180 C24	FT 180 –PVZ-(***)-(***) /M(**)	13 dia	0.057	45	25	50	100	205	720	246

* Twisting Rating not applicable to flex/only core

Length of Flexible Twistable Assemblies

This overall length of waveguide assemblies, is measured as the distance between the front face of both flanges.
The maximum length of flexible and flexible twistable waveguide is dictated by the mechanical strength of the waveguide and the production tooling available.
The following is a list of the standard recommended length for the various waveguide sizes. Other lengths may be available on request but may be subject to tooling and design charges.
MM: 75, 150, 230, 300, 380, 460, 500, 600, 650, 760, 900, 1000, 1250 and 1500
INCHES: 12, 24, 36 and 48.
All lengths are subject to a tolerance on the length of 1.5% or 2mm or whichever is greater

RUPPtronik, Breslauer Str.14, 83052 Bruckmühl
info@rupptronik.de t. 08062-80 96 96-0 f. 08062-80 96 96-9 www.RUPPtronik.de

Ordering Information

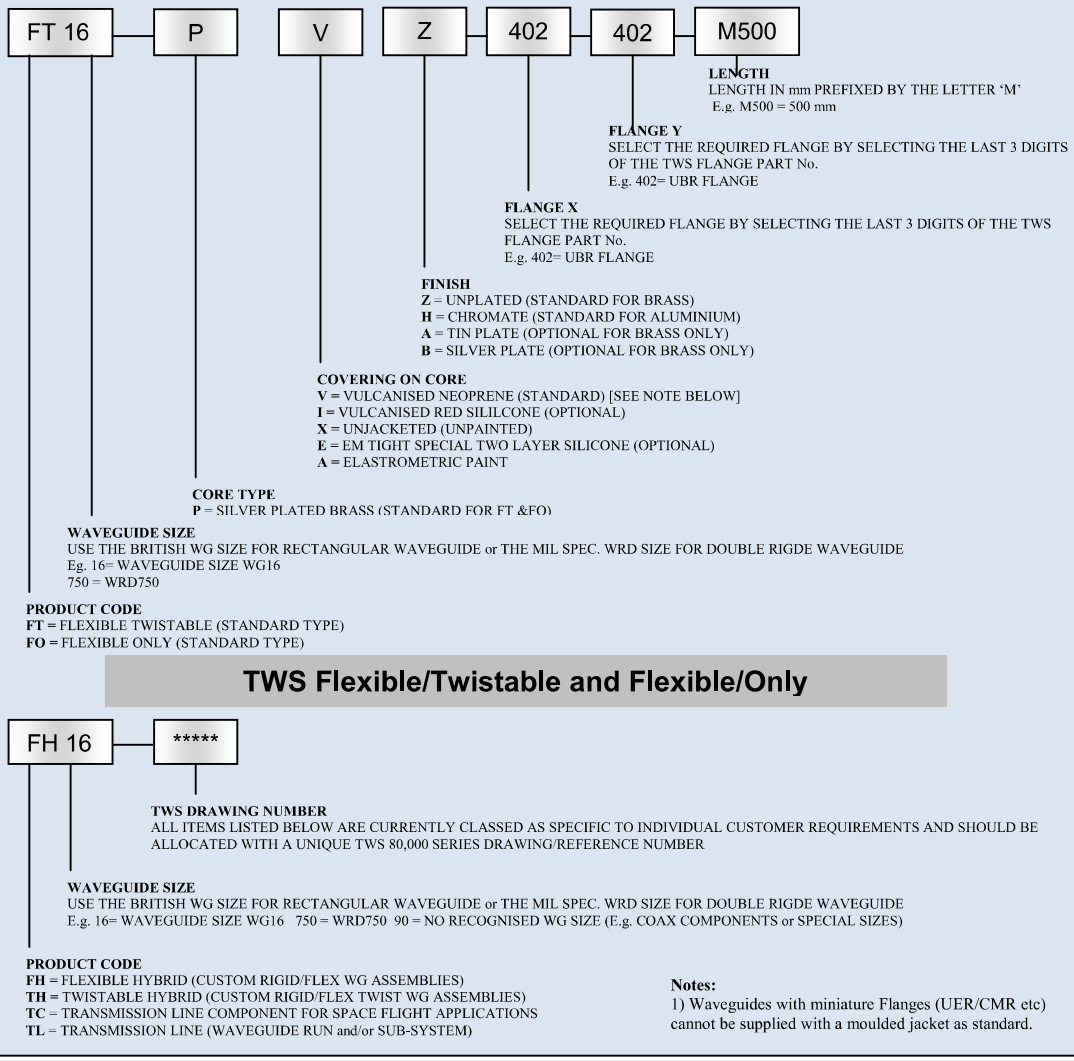

TWS Flexible/Twistable and Flexible/Only

The Waveguide Solution

The Waveguide Solution Limited

RUPPtronik, Breslauer Str.14, 83052 Bruckmühl
info@rupptronik.de t. 08062-80 96 96-0 f. 08062-80 96 96-9 www.RUPPtronik.de